☐ Quote
☐ 1st order ☐ Re-order

Custom Arm & Glove

Fax Orders: 1-800-879-2135
Email: customs@mediusa.com

CIRCAID® medi

Customer Name _____ Customer No. _____ Purchase Order No. _____ Fax _____
Billing Address _____ Patient Name _____
Shipping Address _____ Order Date _____ Measured By _____
Telephone _____ Email _____ Shipping Method _____
Credit Card Info _____

Upper Extremity

juxtafit™ essentials	Left	Quantity	Right	Quantity
☐ arm	☐	_____	☐	_____
☐ glove	☐	_____	☐	_____
☐ dorsum strap	☐	_____	☐	_____
☐ open side	☐	_____	☐	_____
☐ dorsum strap and open side	☐	_____	☐	_____
☐ hand wrap	☐	_____	☐	_____
graduate™ arm (includes hand cover)	☐	_____	☐	_____

Arm options

cover up color

☐ black (default)
☐ pink
☐ beige

graduate™ foam liner color

interior	exterior
☐ beige (default)	☐ black (default)
☐ red	☐ beige
☐ turquoise	☐ red
	☐ turquoise

NOTES:

Please take measurements without tension!

Arm measurement

Circumferences

Left in cm		Right in cm
	55	
	50	
	45	
	40	
	35	
	30	
	25	
	20	
	15	
	10	
	05	
	ℓC Wrist	
	ℓB Palm	

Please hold the arm straight.

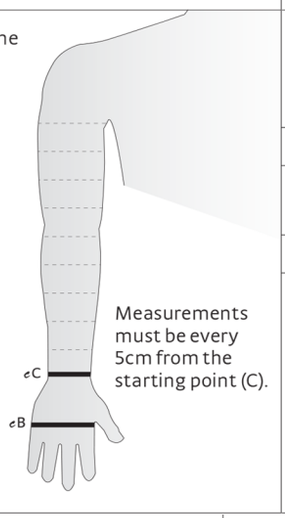

Measurements must be every 5cm from the starting point (C).

Arm measurement

Lengths

Left in cm		Right in cm
	ℓC – G	
	ℓC – E	

Please measure the length on the inside of the arm (from the wrist to elbow crease and from the wrist to axilla).

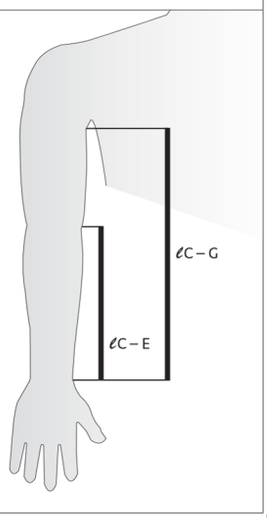

Hand measurement

Circumferences

Left in cm		Right in cm
	1ℓz	
	2ℓz	
	3ℓz	
	4ℓz	
	5ℓz	
	1ℓx	
	2ℓx	
	3ℓx	
	4ℓx	
	5ℓx	
	ℓA	
	ℓB Palm	
	ℓC Wrist	

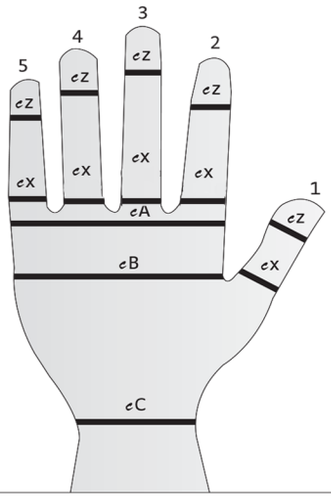

Hand measurement

Lengths

Left in cm		Right in cm
	ℓ1	
	ℓ2	
	ℓ3	
	ℓ4	
	ℓ5	
	ℓ6	
	ℓ7	
	ℓ8	
	ℓ9	
	ℓ10	

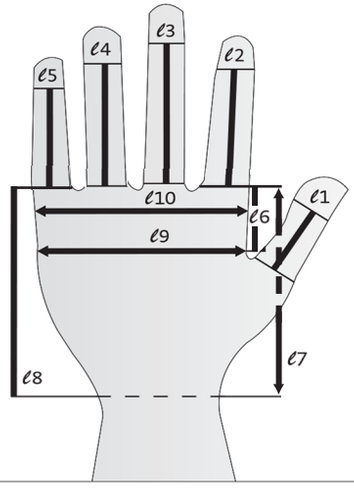

circaid® inelastic compression garments

P0174RevA